O09e - Fringes of Equal Thickness

Lab Group 6: Mohammed Zulasheer (3732256), Jordan Grey (3797129)

May 6, 2025

Abstract

This study investigates the wave properties of light, by examining different kinds of interference pattern formed under different circumstances. Utilizing this wave-like property of light physical quantities such as the radius of curvature of a convex lens in n=Newton's ring formation, the thickness of aluminium foil and the diameter of a strand of hair were measured. For the Newton Rings experiment complications significantly impacted accuracy of results. These complications introduced difficulty in determining fringe diameters and caused misalignment in the data between the $k \in [-10, 0]$ and $k \in [0, 10]$ ranges, rendering data points $k = 1, 2, 3$ unusable. Linear fitting showed a strong linear correlation ($r^2 = 0.99630$) between r_k^2 and k. From this, the contact distance was determined to be $d_0 = (0.794 \pm 0.065)\mu m$ and the radius of curvature $R = (3.972 \pm 0.11)m$. However the accuracy of these values are questionable, despite high precision. $R = (3.972 \pm 0.11)m$ is believed to be of the correct order of magnitude. Furthermore, for the determination of the thickness of the metal foil and the hair strand, the experimental data seems to match theoretical predictions very closely with $r^2_{metal} = 0.99856$ and $r^2_{aluminium} = 0.99911$, which show a strong linear correlation between the fringe position and fringe number. Linear regression on this data yielded the results $D^{metal}_{slope} = (28.0 \pm 0.608)\mu m$ and $D^{hair}_{slope} = (65.7 \pm 1.43)\mu m$ which closely match the thickness value obtained from the fringe separation method, $D^{metal}_{separation} = (28.2 \pm 0.612)\mu m$ and $D^{hair}_{separation} = (66.5 \pm 1.45)\mu m$, which evidently fall with the uncertainty of one another. These values have a percentage uncertainty of $\approx 0.7\%$ for the thickness of the metal foil, and $\approx 1.2\%$ for the thickness of the hair strand. For future experimentation it is recommended to use lights of different wavelengths or a light source of lower wavelength and increase the number of fringe measurements.

1 Introduction

This report explores the wave nature of light by examining the formation of interference patterns due to phase difference between incident and reflected light in the intermediate gap between two surfaces

For this purpose two experimental setups were investigated. Using an Abbe comparator and observing the pattern formed by the interference of light between a convex lens and a plane transparent surface, Newton's ring were observed and studied in order to find the radius of curvature of the lens. In another setup the interference pattern due to a metal foil wedged between two clear glass surfaces was observed. A similar experiment was conducted for a strand of hair in place of the metal foil. In both cases of the wedge interference experiment interference pattern allowed the calculation of the thickness of the metal foil and the diameter of the strand of hair.

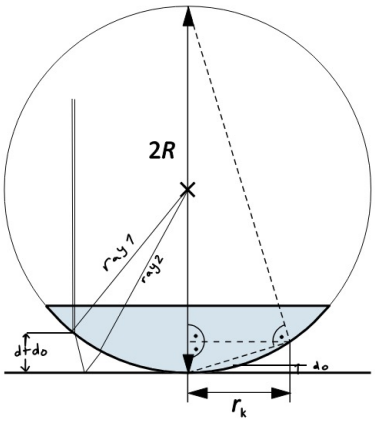

Figure 1: Annotation of Newton Ring Phenomenon

Source: [2]

2 Theoretical Analysis

2.1 Newton Rings

Newton rings most famously occur when a convex lens is places on a glass plane Fig.1. The optical phenomenon forms due to both the geometry of the two glass objects and the optical interference of light through the differing mediums involved.

From literature the optical path difference between two rays, (one that has reflected off the curved surface of the convex lens and the other that has refracted through the lens and reflected off the glass plane. Fig.1.) is defined as [2]:

$$\Delta x = 2(d + d_0) \tag{1}$$

Where:

d_0 : contact distance (m)
d : air gap beyond contact distance (m)
λ : wavelength of light (m)

Given that ray two undergoes a reflection at an interface of higher refractive index, a 180° degree phase shift occurs and thus should be considered in the total phase shift between the two rays, which is:

$$\delta = \frac{2\pi\Delta x}{\lambda} + \pi = \frac{4\pi(d + d_0)}{\lambda} + \pi \tag{2}$$

To model the radius' of the destructive fringes caused by the interference the condition for destructive fringes, ac-

counting for the single phase shift, is used [1]:

$$2(d + d_0) = k\lambda \tag{3}$$

Where:

k : the order of the fringe such that, $k \in \mathbb{Z}$

Additionally through a trigonometric analysis of the apparatus in Fig.1. A relation between the destructive radius ring r_k and the radius of curvature for concave lens R was determined to be:

$$r_k^2 = d(2R - d) \tag{4}$$

With the above equations, a relation between the radius of curvature and the radius of the k-th destructive fringe, r_k, can be determined by first rearranging Eq.(3) as:

$$d = \frac{k\lambda}{2} - d_0 \tag{5}$$

and substituting Eq.(5) into Eq.(4):

$$\begin{aligned} r_k^2 &= \left(\tfrac{k\lambda}{2} - d_0\right)\left[2R - \left(\tfrac{k\lambda}{2} - d_0\right)\right] \\ r_k^2 &= R\lambda k - 2Rd_0 - \left(\tfrac{k\lambda}{2} - d_0\right)^2 \end{aligned} \tag{6}$$

Recall:

$d = \frac{k\lambda}{2} - d_0$

as $d << R \implies d^2 \approx 0$ and can be neglected for the purposes of this report, resulting in:

$$r_k^2 = R\lambda k - 2Rd_0 \tag{7}$$

2.2 Wedge Interference

Wedge interference occurs when monochromatic light reflects off two surfaces that form a very thin, wedge-shaped air (or other medium) gap, which is created by placing a film, metal foil, thin wire, strand of hair etc, between the two. The reflected waves from these two surfaces overlap, causing constructive and destructive interference, resulting in visible fringes. Interference arises due to the difference in optical paths traveled by the light reflected from the first boundary and the reflected light which travels slightly further through the wedge.

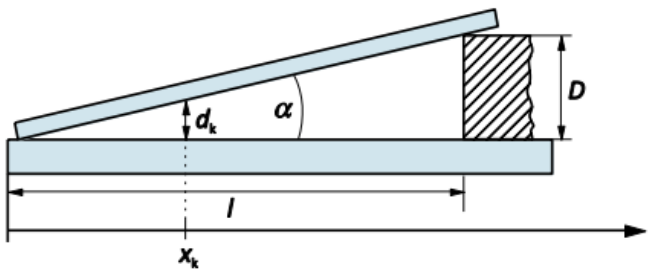

Figure 2: Annotation of Wedge Interference Phenomenon

Source: [2]

Using the geometry of similar triangles the following relation can be obtained:

$$tan(\alpha) = \frac{d(x_k)}{x_k} = \frac{D}{l} \tag{8}$$

Where:

α :	Angle of elevation
$d(x_k)$:	Local air gap distance at position x
x_k :	Horizontal position of the fringe.
D :	Thickness of the metal foil
l :	Length of the wedge

When monochromatic light of wavelength λ is incident normally,

- One reflected ray comes from the **top** air–glass interface.
- The other reflected ray comes from the **bottom** air–glass interface.

Because the bottom reflection occurs at the optically denser medium, it picks up an extra phase shift of π, i.e. an additional half-wavelength in optical path.
Hence the total path difference is:

$$\Delta(x_k) = 2d(x_k) + \frac{\lambda}{2} \tag{9}$$

Inserting the condition of constructive interference ($\Delta(x_k) = k\lambda$) [1] and the relation from Eq.(8) the above equation takes the form:

$$2\frac{D}{l} \cdot x_k + \frac{\lambda}{2} = k\lambda$$

Further algebraic manipulation provides a linear relation between the fringe position x and the fringe number k:

$$x_k = \frac{l\lambda}{2D} \cdot k - \frac{l\lambda}{4D} \tag{10}$$

This equation can be further analyzed to obtain the fringe separation:

$$\begin{aligned} \Delta &= x_{k+1} - x_k \\ \Delta &= \frac{l\lambda}{2D} \end{aligned} \tag{11}$$

The equation for the position of dark fringes can be obtained by substituting $\Delta(x) = (k + \frac{1}{2})\lambda$ for condition of destructive interference in Eq.(9):

$$x_k = \frac{l\lambda}{2D} \cdot k$$

3 Experimental Analysis

3.1 Newton's Rings
(Task I)

3.1.1 Experimental Setup

A convex lens of unknown radius of curvature was placed on top of a glass plate within an Abbe Comparator, Fig.3. A high pressure mercury lamp was placed, facing another glass plate mounted under the convex-plate combo at a 45° degree to both the incoming light rays and the convex lens. A 546nm wavelength filter was placed in front of the mercury lamp to restrict incoming rays to a single wavelength. Using the glass scale and adjusting the movable table the center bright fringe of the newton rings was found and the measurement position was shifted to the 10th dark fringe, to the left of the central bright fringe (-10). Then the position of each dark fringe from the 10th dark fringe to the left (-10), to the 10th dark fringe to the right (10) using the scale on the microscope was measured, for a total of 20 data points.
From the data collected the diameter of the dark-fringe 'pairs' *(e.g. -10 and 10)* was determined and Eq. (7) was to model the data collected, with $D_k = 2r_k$.

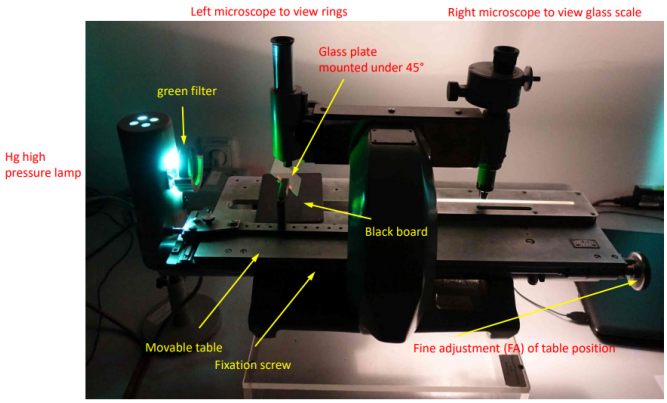

Figure 3: Experimental Setup

Source: [2]

3.1.2 Data Analysis

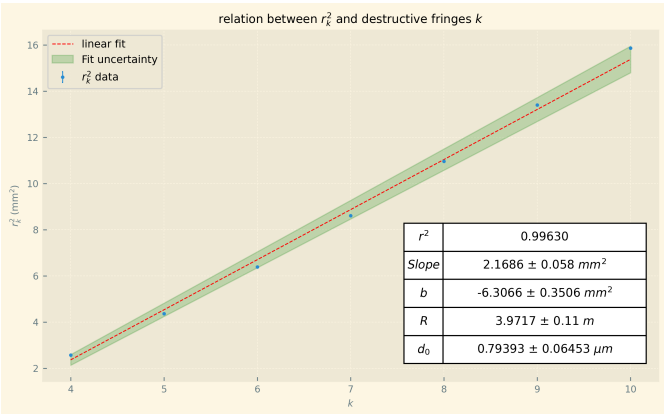

Figure 4: Trend of the k-th dark fringe square radius for increasing k

During the modeling process, multiple complications arose as a result of the experimental methodology outlined previously. Two most notable complications; no zeroing measurement was taken to indicate the position of the central bright fringe with respect to the microscopes scale, and the limited range of the Abbe Comparator resulted in a realignment of the lens and glass plate combo and the linear rail of the Abbe Comparator during the measurement of the right-sided dark fringe measurements.

These two complications resulted in significant difficulty determining the diameter of the dark fringes and the experimental data was misaligned between (-10 to 0) measurements and (0 to 10) measurements, resulting in the data points $|k| = 1, 2, 3$ being unsuitable for modeling.

Upon initial inspection the results of Fig.4. shows a strong linear correlation,$r^2 = 0.99630$, between r_k^2 and k, with a determined contact distance $d_0 = (0.794 \pm 0.065)\mu m$ and radius of curvature $R = (3.972 \pm 0.11)m$. However as previously mentioned, due to complications and a faulty experimental methodology, the accuracy of the data is questionable, and the precision of experimental data to the fitted parameters may not reflect/be similar to, true values. However it is believed that the radius of curvature $R = (3.972 \pm 0.11)m$, is of the same order of magnitude to the true radius of curvature.

3.1.3 Discussion

The results of the experimental investigation into Newton Rings proved inconclusive. Due, mainly to inadequacies in the experimental methodology and needing to realign the lens and glass plate along the Abbe Comparator. Fig.4. depicts a strong linear relationship between square of k-th dark fringe radius and the order of k, $r^2 = 0.99630$, with fitted values for the radius of curvature and contact distance as $R = (3.972 \pm 0.11)m$ and $d_0 = (0.794 \pm 0.065)\mu m$, respectively. despite prediction that the radius R is of the correct order of magnitude to true values, it is strongly believed that these fitted values do not reflect true-values due to the inadequacies in the methodology of the experiment these values have little accuracy despite high precision to the mathematical model Eq.(7).

For future investigation into Newton Rings via the setup presented in Fig.3. It is recommended to record to the position of the central bright fringe as a zeroing measurement, in case of the necessary realignment due to the limitations of the moving table. Additionally it is recommended setup the apparatus such that no realignment is necessary.

3.2 Wedge Interference
(Task II & Task III)

3.2.1 Experimental Setup

To observe the interference pattern due to the metal foil sandwiched between two clear glass plates, the apparatus seen in Fig.3 was used. Wherein a high pressure mercury lamp, together with a filter to allow monochromatic light of $\lambda = 546$ nm through produced an interference pattern. The apparatus included two microscopes. The wedge with the metal foil was placed on the black board and observed from the left microscope, through a glass plate inclined at 45° which deflected the incoming light from the lamp onto the glass plates. An arbitrary bright fringe was selected as the first and its position was measured by aligning the vertical marker visible in the ocular of the left microscope with that fringe. The position was read from the right microscope, which provided a value of up to 0.2 μm in accuracy.

The positions of nine additional right-neighboring fringes were measured in the same way by adjusting the horizontal position of the board on the table. This experiment was replicated for a hair sandwiched between two glass plates. In both cases, the plates were wiped and cleaned in order to minimize error due to any impurities or dust.

The datasets for both experiments were plotted and analyzed by performing a linear regression using Eq.(10). From this linear regression, the thicknesses of the metal foil and the hair were determined. To provide secondary values for the thickness, Eq.(11) was used after calculating the separation of successive fringes and averaging over all the values.

3.2.2 Data Analysis

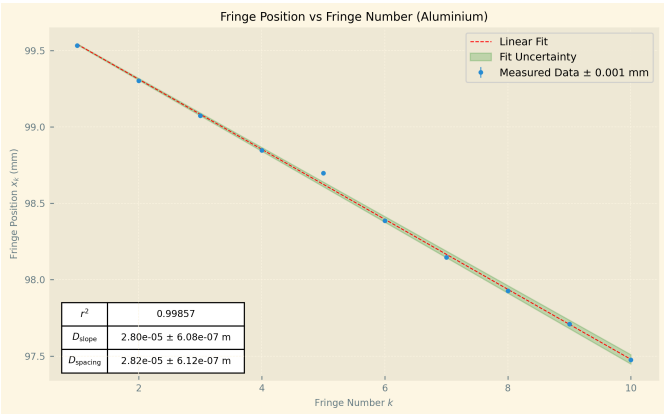

Figure 5: Linear Fitting for Wedge Interference (Aluminium)

As shown in Fig.5 the value obtained for the thickness of the metal foil, from the linear regression of Eq.(10) was $D_{slope}^{metal} = (28.0 \pm 0.608)\mu$m. Additionally, the linear regression has a $r^2 = 0.99587$ which suggests a strong correlation with determined parameter. The graph shows a linear decreasing trend of x_k as K increases. It is apparent from this trend that the slope of the graph will be negative, which in turn results in a negative values for D_{slope}. This is however only a result of oversight during the experiment, the negative sign is a result of numbering the fringes 1-10 from higher to lower position, had the the fringes been number the correct way from lowest to highest position values a positive value for D_{slope} would have been obtained. This however is predicted not to have adverse effect on the result since the absolute value of the thickness of was considered and no matter the indexing convention, the absolute value of the slope should remain the same.

In addition to the value of the thickness obtained from the linear fit, another calculation for the thickness was made using Eq.(11). Each experimentally determined value of the position of the fringes was subtracted from the previous fringe position to obtain the separation. The average of those separation values was then calculated and inserted in Eq.(11). This method yielded the value $D_{separation}^{metal} = (28.2 \pm 0.612)\mu$m.

The two values for the thickness of the have moderate uncertainties, conveying a moderate degree of precision. Both values of D_{metal} however fall within the uncertainties of each other, suggesting a degree of accuracy in the obtained values. The percentage error in the two values is $\approx 0.7\%$

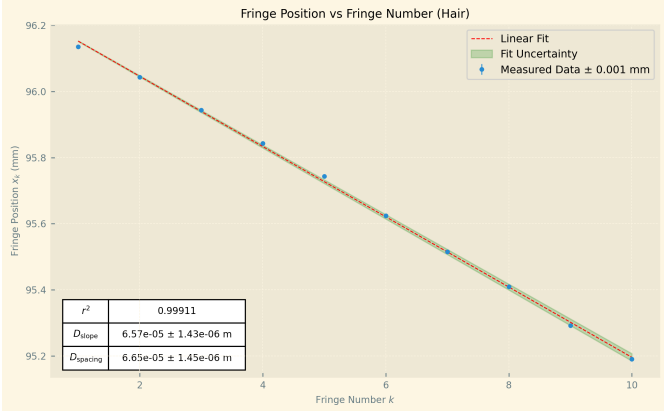

Figure 6: Linear Fitting for Wedge Interference (Hair)

The same analysis techniques were applied in Task III to obtain the thickness of a hair. As Fig.6 depicts, the values of the hair's diameter using linear regression and the separation of fringes are $D_{slope}^{hair} = (65.7 \pm 1.43)\mu$m and $D_{separation}^{hair} = (66.5 \pm 1.45)\mu$m respectively. The linear fitting has an $r^2 = 0.99911$ which shows a very strong correlation with the parameters. The percentage uncertainty in both values is $\approx 1.2\%$ and both the values lie within the uncertainties of one another. These results express a high degree of correlation in the techniques applied and the results that were obtained.

3.2.3 Discussion

Upon comparison of the two values obtained for the thickness of the metal foil, D_{slope}^{metal} and $D_{separation}^{metal}$, and the diameter of the hair, D_{slope}^{hair} and $D_{separation}^{hair}$, it can be observed that in each case the values are not that distinct and fall within the uncertainties of each other.

Although, some factors during the experimental data collection are considered to have effected the final result, they are considered too small to have caused a large discrepancy in the final outcome. One of these factors include the dust particle that may have been gathered on the glass slides. To counter that the slides were thoroughly wiped with the provided cloth, however upon cleaning it was noticed that instead of cleaning the cloth itself left lint and smudges behind. It was still made sure that the slides were fairly clear before taking the measurements, however due to a lack of proper cleaning material some impurities are thought to have been left behind. These impurities resulted in a less clear image of the interference pattern. Additionally, when measuring the position of the bright fringes, the measurement was taken from the left outer boundary of the fringe. However, due to the resolution of the pattern observed through the ocular being small, the boundaries of the fringes were blurry and factoring in the thickness of the marker itself, some level of error can be expected to have been introduced in the measurements.

For future determination of the thickness of an object wedged in between two plates it is recommended to carry out the experiment with a narrower bandwidth. A narrower wavelength range reduces uncertainty and fringe

blurring which will increase the measurement accuracy. Alternatively, the experiment could also be performed multiple times with different wavelengths of light to allow for a number of values for the thickness which would help compare the values and minimize the error introduced by filtering the light to a specific wavelength. Additionally, taking more than 10 measurement will also decrease statistical uncertainties , and error due to misalignment of the fringes with the marker. Lastly, in order to properly remove impurities from the surfaces an adequate cloth should be used.

4 Conclusion

The Newton Ring experiment yielded inconclusive results, primarily due to methodological shortcomings and realigning the lens-glass combo along the Abbe Comparator. Although fitted results show a strong linear relationship between r_k^2 and k, with $r^2 = 0.99630$, and determined parameters $R = (3.972 \pm 0.11)m$ and $d_0 = (0.794 \pm 0.065)\mu m$. This fitting is unlikely to reflect true values, although R is considered to be of the same order of magnitude. For future experimentation into Newton Rings using the setup outlined in this report, it is recommended to record the position of the central bright fringe as a zero reference and to configure the apparatus in a manner that avoids the need for realignment.

In the experiment conducted for wedge interference, unlike the results of the Newton's Rings experiment, the results seem to be fairly accurate with the values being almost the same upon calculations using two methods, namely the linear regression of position x_k vs. fringe number k and the outcome using fringe separation and Eq.(11). The results of this experiment were $D_{slope}^{metal} = (28.0 \pm 0.608)\mu m$ with $r^2 = 0.99587$ and $D_{separation}^{metal} = (28.2 \pm 0.612)\mu m$, and $D_{slope}^{hair} = (65.7 \pm 1.43)\mu m$ with $r^2 = 0.99911$ and $D_{separation}^{hair} = (66.5 \pm 1.45)\mu m$. From the experience gained conducting this experiment some it is recommended for future experiments to measure a larger number of fringes in order to eliminate human error and statistical uncertainties. Additionally, in order to eliminate the error introduced by inaccurate determination of position, it is recommended to use a light source with a smaller wavelength. This will allow more clear and distinct fringes. The experiment could also be conducted multiple times with different wavelengths of light, doing so will allow for calculation of multiple values of the thickness D which can be compared to find an estimated value for the actual thickness. All in all, the the results align with theoretical predictions with deviations resulting from experimental error.

References

[1] Y. D. Hugh and R. A. Freedman. Optics - interference. In *University with Modern Physics*, pages 1187–1213. Pearson, 15th edition, 2020.

[2] M. Ziese. *O09e Fringes of Equal Thickness*. Universität Leipzig, April 2025.